All Dimensions in mm

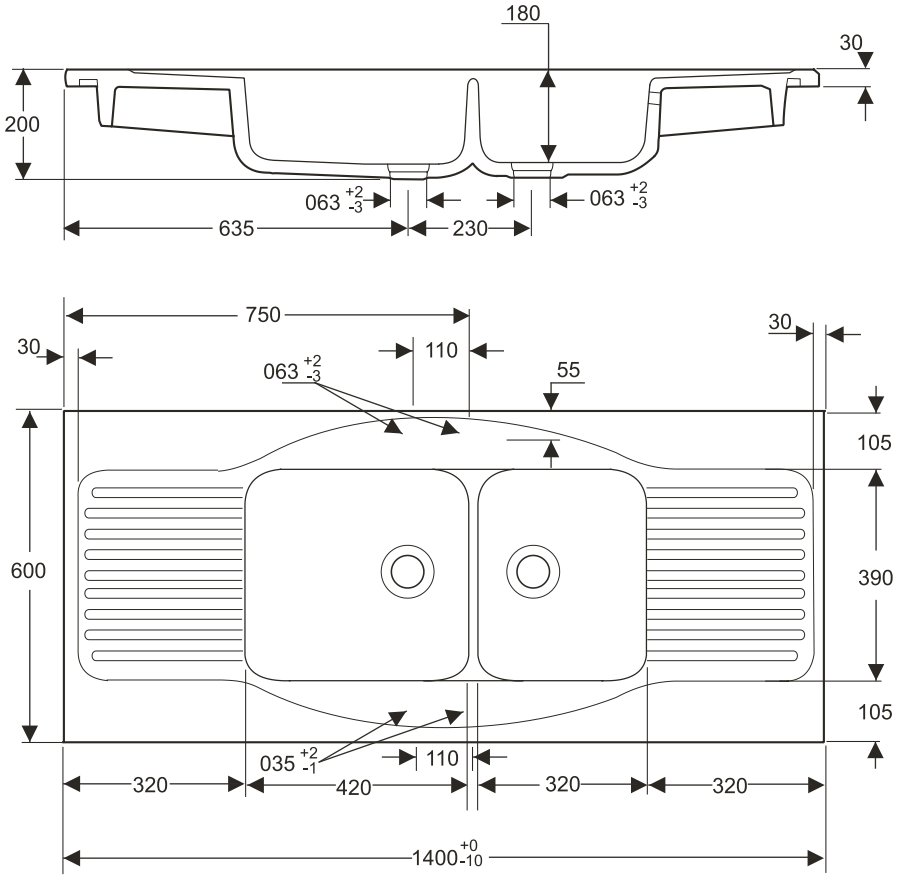

19935W